PRODUCED BY AN [redacted]

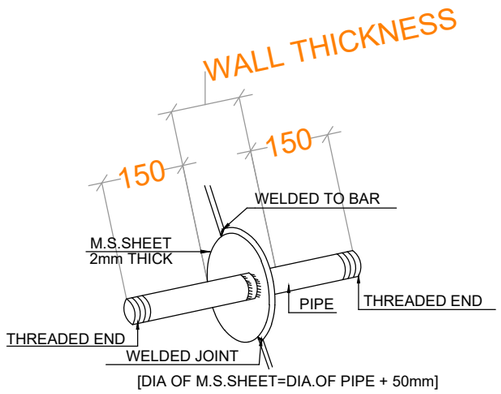

PIPE INSERT

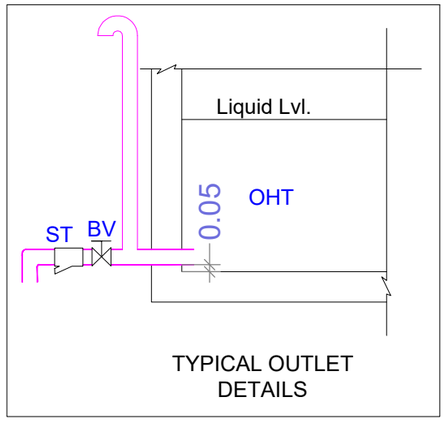

TYPICAL OUTLET DETAILS

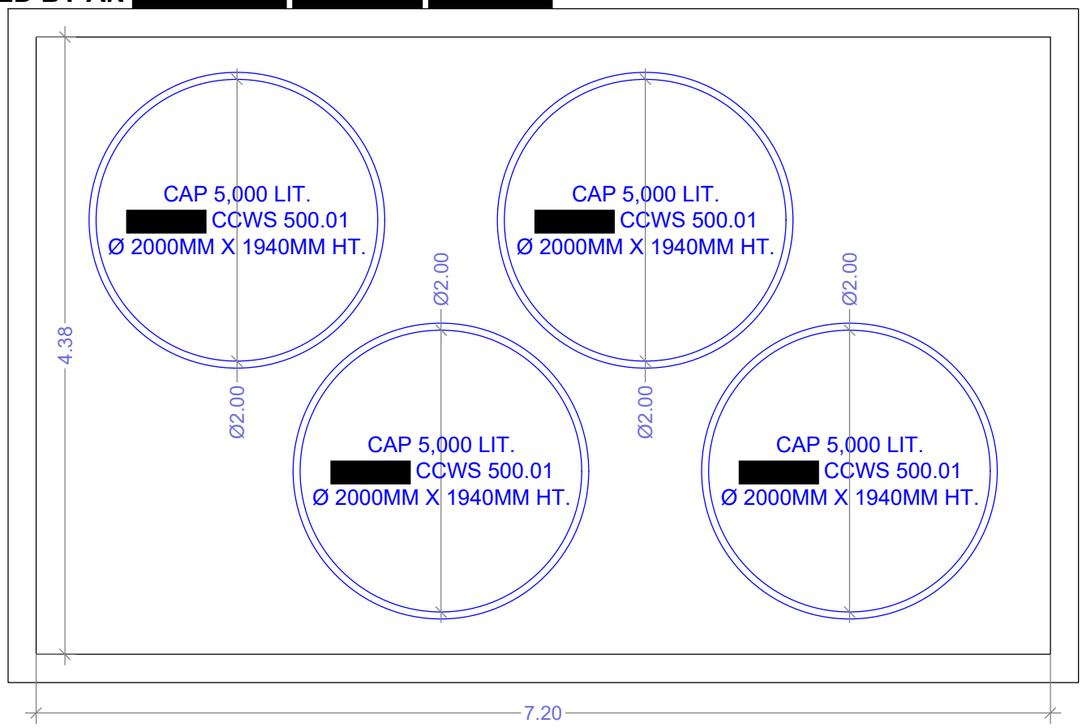

O.H.T. PLAN FOR [redacted] - 1

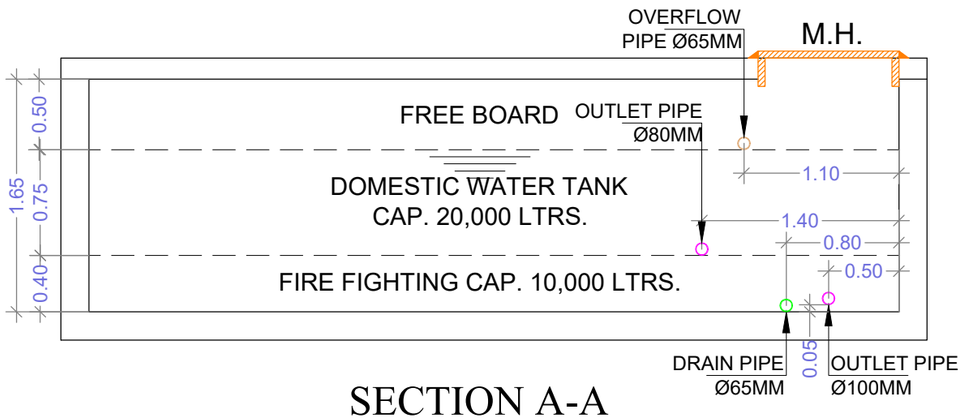

SECTION A-A

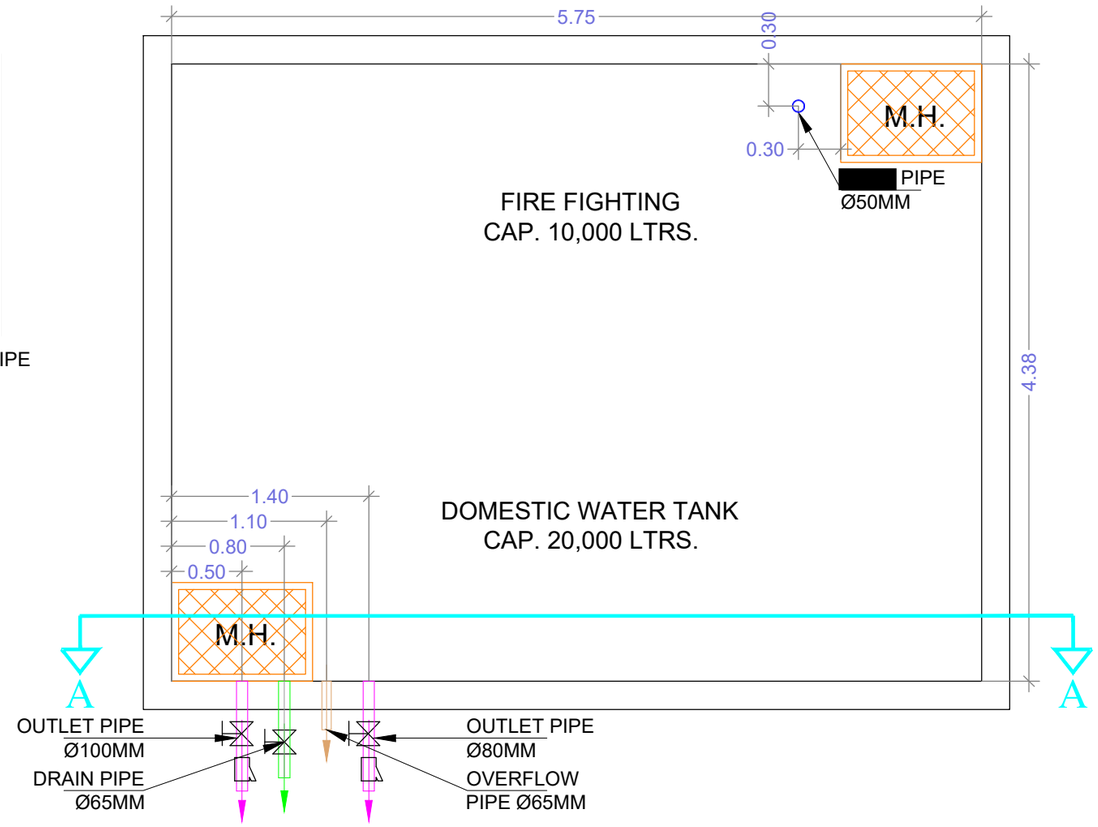

O.H.T. PLAN FOR [redacted]

[redacted]	M/167/06
	R1
	01/01
[redacted]	
[redacted]	
[redacted]	MAIN
	OVERFLOW PIPE
	OUTLET PIPE
	DRAIN PIPE
	[redacted] VALVE (BV)
	[redacted] (ST)
	[redacted] 600 X 900 mm.

[redacted] PLAN

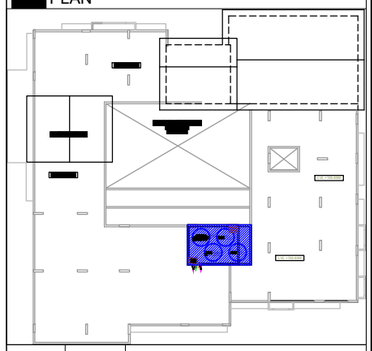

[redacted]	[redacted] PER ARCH. [redacted]
[redacted]	
[redacted]	[redacted] WATER TANK DETAILS
[redacted]	[redacted] & [redacted]
[redacted]	[redacted] AND [redacted] Colony, Vithalwadi Road, [redacted] 2432 0010
[redacted]	[redacted] LELE
[redacted]	[redacted]
NORTH	[redacted] 26.11.2019
	[redacted] G.
	[redacted] P.
SCALE:-NTS	[redacted] BY [redacted] P.

C:\Users\Dell\Downloads\ARC Plumbing Drawings (1)\ARC Plumbing Drawings\R1 OHT Details 26.03.21.dwg

PRODUCED BY AN AUTODESK STUDENT VERSION

PRODUCED BY AN [redacted] STUDENT VERSION